Spring plunger

FSTE G1/8-AG 50

Part no..:10.01.02.00604

Home > Vacuum Technology for Automation > Vacuum Components > Mounting Elements > Spring Plungers > Spring Plungers FSTE > FSTE G1/8-AG 50

Spring plunger with damping and height compensation

Suction cup connection: G1/8"-M
Vacuum connection: G1/8"-F
Spring stroke Z: 50 mm

Design Data

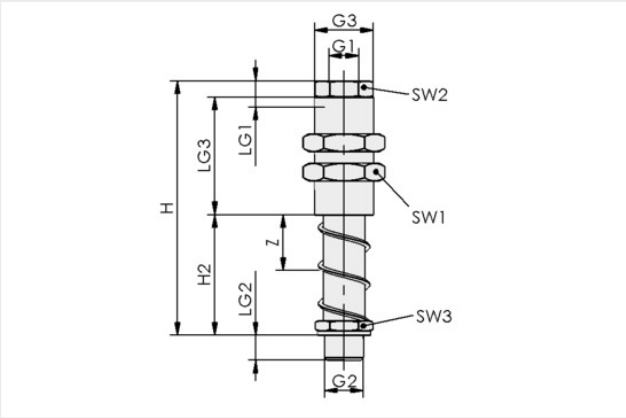

Attribute	Value
G1	G1/8"-F
G2	G1/8"-M
G3	M16x1-M
H	117.50 mm
H2	73.50 mm
LG1	8 mm
LG2	6.50 mm
LG3	30 mm
SW1	22 mm
SW2	12 mm
SW3	14 mm
Z (Stroke)	50 mm

Technical Data

Attribute	Value
Spring rate	0.10 N/mm
Spring pretension	2.92 N
Spring force, center	5.34 N
Vertical load	3700 N
Horizontal load	173 N
Weight	110 g

Spring plunger

FSTE G1/8-AG 50

Part no..:10.01.02.00604

Operating temperature	0 ... 80 °C
Product family	FSTE

Accessories

KGL G1/8-IG G1/8-AG A2

Part no..:10.01.03.00109

Thread G1: G1/8"-F
Thread G2: G1/8"-M
Height H: 26.5 mm
Material: Aust. Stainless steel

HTR-STA 47 1N D10/16 FL

Part no..:10.08.03.00085

Length L: 47 mm
Connection 1: Sliding block
Connection of suction cup, spring plunger: Contour D10 and D16
Shape: flat

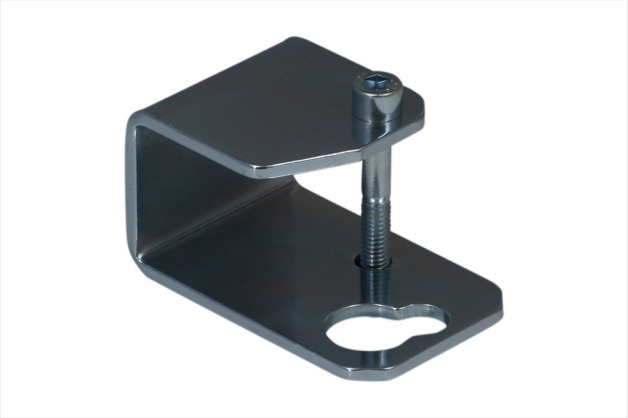

HTR-STS 30x30 D10/16 WI

Part no..:10.08.03.00088

Connection 1: 30x30
Connection of suction cup, spring plunger: Contour D10 and D16
Shape: angled

HTR-STS 40x40 D10/16 WI

Part no..:10.08.03.00089

Connection 1: 40x40
Connection of suction cup, spring plunger: Contour D10 and D16
Shape: angled

ST G1/8-AG 4 MS-V

Part no..:10.08.03.00153

Thread G1: G1/8"-M
Hose diameter (empf.) d: 4 mm
Material: Brass
Surface: nickel plated
Length L: 5 mm
Nominal diameter dn: 3.5 mm

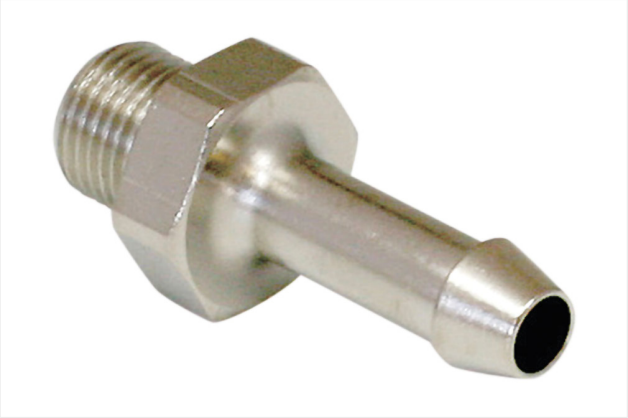

ST G1/8-AG 6 MS-V

Part no..:10.08.03.00154

Thread G1: G1/8"-M
Hose diameter (empf.) d: 6 mm
Material: Brass
Surface: nickel plated
Length L: 5 mm
Nominal diameter dn: 4.4 mm

ST G1/8-AG 9 MS-V

Part no..:10.08.03.00155

Thread G1: G1/8"-M
Hose diameter (empf.) d: 9 mm
Material: Brass
Surface: nickel plated
Length L: 5 mm
Nominal diameter dn: 4 mm

STV-GE G1/8-AG 4

Part no..:10.08.02.00202

Thread G1: G1/8"-M
Hose diameter: 4 mm
Material: Brass
Operating temperature: -20 ... 80 °C
External diameter D: 7.9 mm
Length L: 13.7 mm

Spring plunger

FSTE G1/8-AG 50

Part no..:10.01.02.00604

STV-GE G1/8-AG 6

Part no..:10.08.02.00204

Thread G1: G1/8"-M
Hose diameter: 6 mm
Material: Brass
Operating temperature: -20 ... 80 °C
External diameter D: 11.4 mm
Length L: 16.4 mm

STV-GE G1/8-AG 8

Part no..:10.08.02.00206

Thread G1: G1/8"-M
Hose diameter: 8 mm
Material: Brass
Operating temperature: °C
External diameter D: 14 mm
Length L: 20.7 mm

STV-W G1/8-AG 4

Part no..:10.08.02.00156

Thread G1: G1/8"-M
Hose diameter: 4 mm
Material: Nickel plated
Operating temperature: -20 ... 80 °C
Length L: 16.4 mm

STV-W G1/8-AG 6

Part no..:10.08.02.00158

Thread G1: G1/8"-M
Hose diameter: 6 mm
Material: Nickel plated
Operating temperature: -20 ... 80 °C
Length L: 20.1 mm

STV-W G1/8-AG 8

Part no..:10.08.02.00160

Thread G1: G1/8"-M
Hose diameter: 8 mm
Material: Nickel plated
Operating temperature: -20 ... 80 °C
Length L: 24 mm

STV-GE G1/8-AG 6 HT

Part no..:10.08.02.00389

Thread G1: G1/8"-M
Hose diameter: 6 mm
Material: Brass
Operating temperature: -20 ... 120 °C
External diameter D: 11.6 mm
Length L: 19 mm

STV-W G1/8-AG 6

Part no..:10.08.02.00288

Thread G1: G1/8"-M
Hose diameter: 6 mm
Material: Plastic
Operating temperature: °C
Length L: 20.8 mm

STV-W G1/8-AG 6 HT

Part no..:10.08.02.00391

Thread G1: G1/8"-M
Hose diameter: 6 mm
Material: Brass
Operating temperature: -50 ... 200 °C
Length L: 22.5 mm

STV-WF G1/8-AG 4

Part no..:10.08.02.00166

Thread G1: G1/8"-M
Hose diameter: 4 mm
Material: Nickel plated
Operating temperature: -10 ... 70 °C
Length L: 17.4 mm

STV-WF G1/8-AG 6

Part no..:10.08.02.00168

Thread G1: G1/8"-M
Hose diameter: 6 mm
Material: Nickel plated
Operating temperature: -10 ... 70 °C
Length L: 21.4 mm

STV-WF G1/8-AG 8

Part no..:10.08.02.00170

Thread G1: G1/8"-M
Hose diameter: 8 mm
Material: Nickel plated
Operating temperature: -10 ... 70 °C
Length L: 23.4 mm

STV-WF G1/8-AG 10

Part no..:10.08.02.00257

Thread G1: G1/8"-M
Hose diameter: 10 mm
Material: Nickel plated
Operating temperature: -10 ... 70 °C
Length L: 25.2 mm

Spring plunger

FSTE G1/8-AG 50

Part no..:10.01.02.00604

STV-T G1/8-AG 4

Part no..:10.09.02.00039

Thread G1: G1/8"-M
Hose diameter: 4 mm
Material: Brass
Operating temperature: °C
Length L: 32.5 mm

STV-T G1/8-AG 6

Part no..:10.09.02.00040

Thread G1: G1/8"-M
Hose diameter: 6 mm
Material: Brass
Operating temperature: °C
Length L: 41.5 mm

STV-T G1/8-AG 8

Part no..:10.09.02.00041

Thread G1: G1/8"-M
Hose diameter: 8 mm
Material: Brass
Operating temperature: °C
Length L: 48.7 mm